SINTERFILTRI

SCHEDA TECNICA / *DATA SHEET*

SERM

Silenziatore con rete microforata in acciaio inox AISI 304 ribattuta su base esagonale in ottone - Filettatura GAS-BSP

Silencer with micro network in AISI 304 stainless steel riveted on a hexagonalbrass - GAS-BSP thread



CARATTERISTICHE / *FEAUTURES*

Fluido: Aria
Pressione d'esercizio: 1 MPa 10 bar
Temperatura d'esercizio -20 ° C + 150° C
Filettatura: GAS-BSP rif. UNI EN ISO 228-1:2003

Acciaio Inox AISI 304L
X2CrNI18-11 UNI EN 10088-1

Ottone / Brass
CW 614 N UNI EN 12164 CuZn39Pb

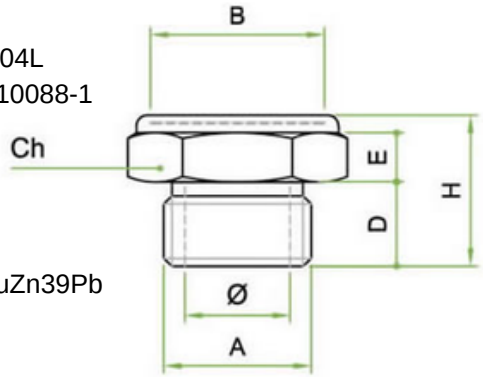

Unità di misura espressa in millimetri - tolleranze rif. normativa En-22768 ISO-2768-c . Misura ch +0/-0.10 mm

Codice	Articolo	A	Diam	B	D	E	H	Ch
376	SERM 1/8	1/8"	6,0	10,0	6,0	4,0	12,0	13,0
377	SERM 1/4	1/4	8,5	12,0	8,0	5,0	14,0	16,0
378	SERM 3/8	3/8"	11,5	17,0	8,0	5,0	17,0	19,0
379	SERM 1/2	1/2"	15,0	21,0	10,0	6,0	18,0	24,0
380	SERM 3/4	3/4"	20,0	27,0	10,0	6,0	19,0	30,0
381	SERM 1	1"	26,0	34,0	10,0	6,0	20,0	36,0

SCIP N. 073abea9-9ddc-4b5f-a1a4-9d2a8535df4c

Sinterfiltri S.r.l. | filtri speciali e silenziatori di scarico sinterizzati
Strada del Cascinotto, 248 10156 Torino - ITALY
Tel: +39 0112731864 | info@sinterfiltri.com | www..sinterfiltri.com